更改 REV	设变内容 MODIFICATION	日期 DATE	制图 DRAW	核准 APPROVE
A	图面发行	2012/10/29	JDL	Oscar

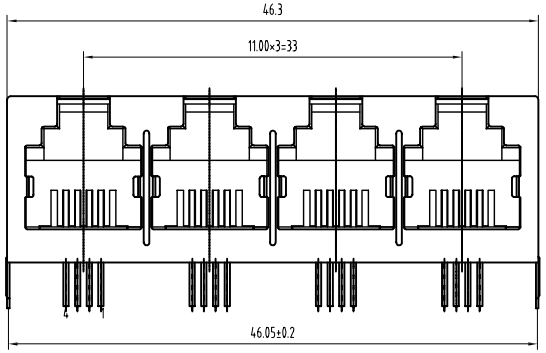

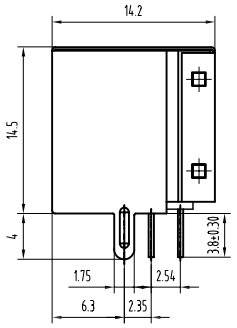

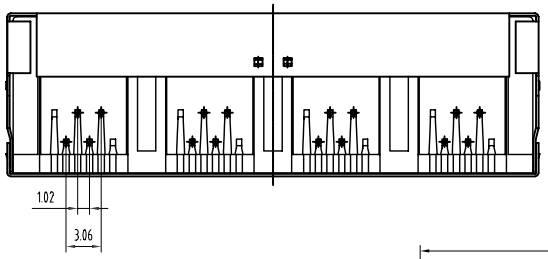

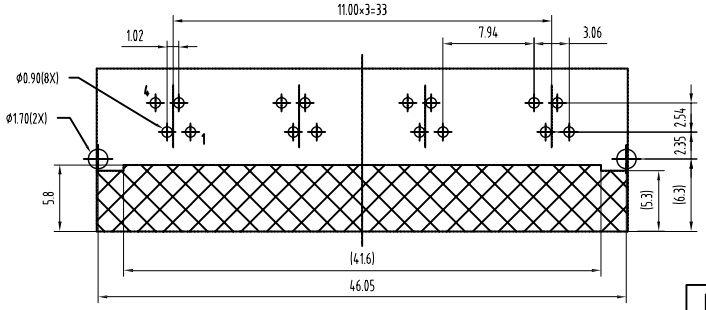

PC Board Layout

NOTES:

MATERIAL:
1.HOUSING MATERIAL :GLASS FILLED POLYESTER(UL94V-0).
2.CONTACT MATERIAL :PHOSPHOR BRONZE T=0.35mm.
3.PLATING :GOLD PLATING OVER NICKEL.
4.SHIELD: COPPER ALLOY 0.20mm THICKNESS PLATING NI.

ELECTRICAL:
1.VOLTAGE RATING :125 VAC RMS.
2.CURRENT RATING :1.5 AMP.
3.CONTACT RESISTANCE :50 MILLIOHMS MAX.
4.INSULATION RESISTANCE :500 MEGOHMS MIN @ 500V DC.
5.DIELECTRIC WITHSTANDING RESISTANCE :1000V AC RMS 50Hz. 1MIN.

MECHANICAL:
1.DURRABILITY :750 CYCLES MIN.
2.PCB RETENTION PRE-SOLDER :1 LB MIN.

ENVIRONMENTAL:
1.STORAGE :-40°C TO +85°C.
2. OPERATION : 0°C TO 70°C.

MATES WITH MODULAR PLUG CONFORMING TO FCC PART 68,SUBPART F.

PART NUMBER: 5521-S1464-XX

GOLD PLATING U"
1-Fu" 2-2u" 3-3u" 4-6u"

PLASTIC MATERIALI&COLOR:Black/Yellow/Gray
1-PBT+20%GF Black
2-PA46 Black

If you have any questions,Don't hesitate to email sales@rj45jack.com,please!

RoHS 2002/95/EC

HTTP://WWW.RJ45JACK.COM

YOU LONG CONNECT THE WORLD

YOU LONG ELECTRONICS LIMITED

QC :Inspection Item

CPK :Cp/Cpk and SPC Control Item

DIMENSION IN mm [Inch]

TOLERANCE UNLESS OTHERWISE SPECIFIED

.X± 0.20	X.°± 1°
.XX± 0.15	.X°± 0.5°
.XXX± 0.075	

专案号 FILE NO.	
图号 DWG NO.	YL5521-S1464
名称 TITLE	5521 1X4 6P4C PCB JACK WITH SHIELDED SIDE ENTRY,ROUND PIN
核准 APPROVE	
审核 CHECK	
制图 DRAW	Oscar
角法 PROJ.	
比例 SCALE	1:1
图纸 SIZE	A3
张数 SHEET	1 / 1
更改 REV	A