更改 REV	设变内容 MODIFICATION	日期 DATE	制图 DRAW	核准 APPROVE
A	图面发行	2012/10/29	JDL	Oscar

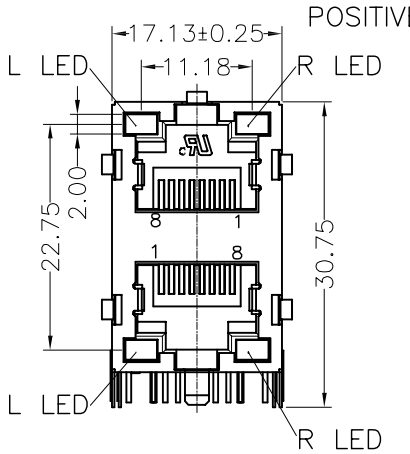

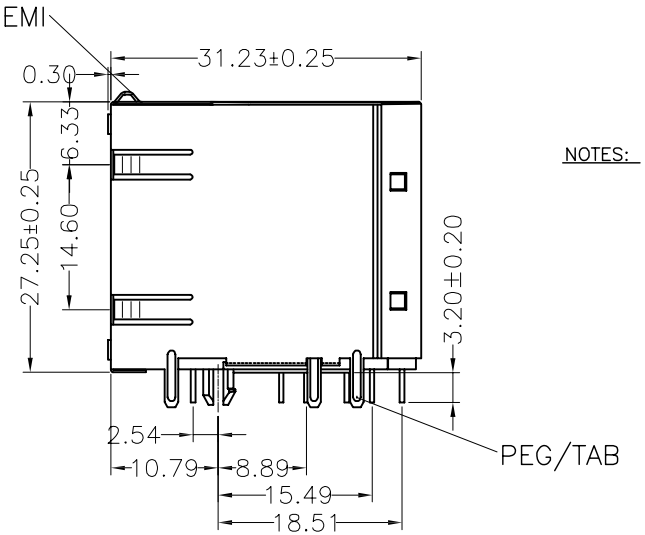

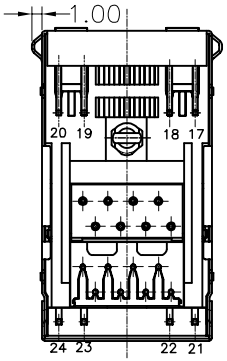

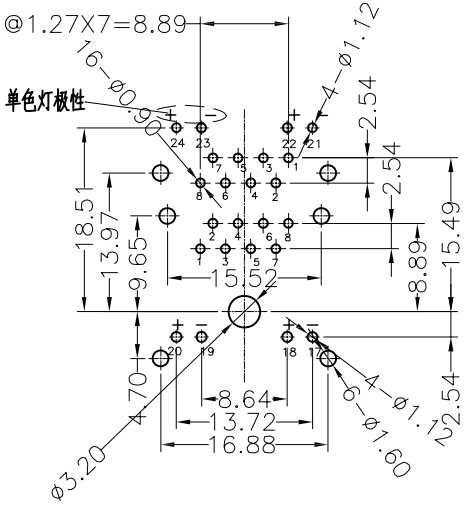

PC Board Layout

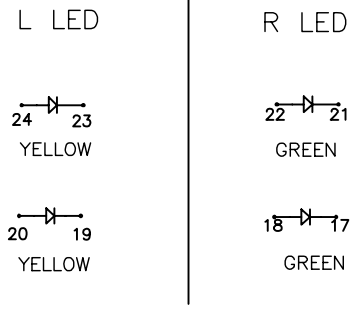

NOTES:

MATERIAL:
1.HOUSING MATERIAL :GLASS FILLED POLYESTER(UL94V-0).
2.CONTACT MATERIAL :PHOSPHOR BRONZE ø0.46mm (C5100).
3.PLATING :GOLD PLATING OVER NICKEL.
4.SHIELD: COPPER ALLOY(OR STEEL ALLOY) 0.20mm THICKNESS PLATING NI.
5.LED: OPTION.

ELECTRICAL:
1.VOLTAGE RATING :125 VAC RMS.
2.CURRENT RATING :1.5 AMP.
3.CONTACT RESISTANCE :50 MILLIOHMS MAX.
4.INSULATION RESISTANCE :500 MEGOHMS MIN @ 500V DC.
5.DIELECTRIC WITHSTANDING
RESISTANCE :1000V AC RMS 50Hz. 1MIN.
6.LED RATINGS:FORWARD VOLTAGE:2.2 VOLTS TYPICAL.
REVERSE VOLTAGE:5 VOLTS MAXIMUM.

MECHANICAL:
1.DURRABILITY:750 CYCLES MIN.
2.PCB RETENTION PRE-SOLDER

ENVIRONMENTAL:
1.STORAGE :-40°C TO +85°C.
2. OPERATION: -20°C TO 70°C.

MATES WITH MODULAR PLUG CONFORMING TO FCC PART 68,SUBPART F.

PART NUMBER: 59B-S2108L1-E1XX

GOLD PLATING U"
1-Fu" 2-2u" 3-3u" 4-6u"

PLASTIC MATERIALI&COLOR:Black/Yellow/Gray
1-PBT+20%GF Black
2-PA46 Black

If you have any questions,Don't hesitate to email sales@rj45jack.com,please!

HTTP://WWW.RJ45JACK.COM

YOU LONG CONNECT THE WORLD

YOU LONG ELECTRONICS LIMITED

QC :Inspection Item
CPK :Cp/Cpk and SPC Control Item

DIMENSION IN mm [Inch]

TOLERANCE UNLESS OTHERWISE SPECIFIED

.X± 0.20	X.°± 1°
.XX± 0.15	.X°± 0.5°
.XXX± 0.075	

专案号 FILE NO.	图号 DWG NO. YL59B-S2108L1-E1
名称 TITLE	59B 2X1 8P8C PCB JACK&SHIELDED WITH EMI FINGER SIDE ENTRY,ROUND PIN
核准 APPROVE	审核 CHECK
制图 DRAW	Oscar
角法 PROJ.	
比例 SCALE	1:1
图纸 SIZE	A3
张数 SHEET	1 / 1
更改 REV	A